Sydney: (02) 9890 9111
Brisbane: (07) 3715 2200
Melbourne: (03) 9212 4422
Perth: (08) 9373 9999
Adelaide: (08) 9373 9969
sales@machineryhouse.com.au
www.machineryhouse.com.au

Product Brochure For PP630

QUICK CHANGE ADAPTOR 30MM - #39

RSBQ30B & RSBQ30A

Suits: DOUBLE CYL. PUNCH & SHEARS + other models

Ex GST	Inc GST
$130.00	$143.00

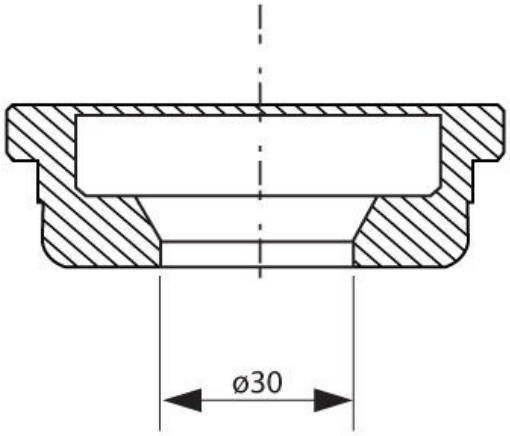

Specific Features

PP630 QUICK CHANGE ADAPTOR 31MM